double Blue CHALLENGE CUP 2018

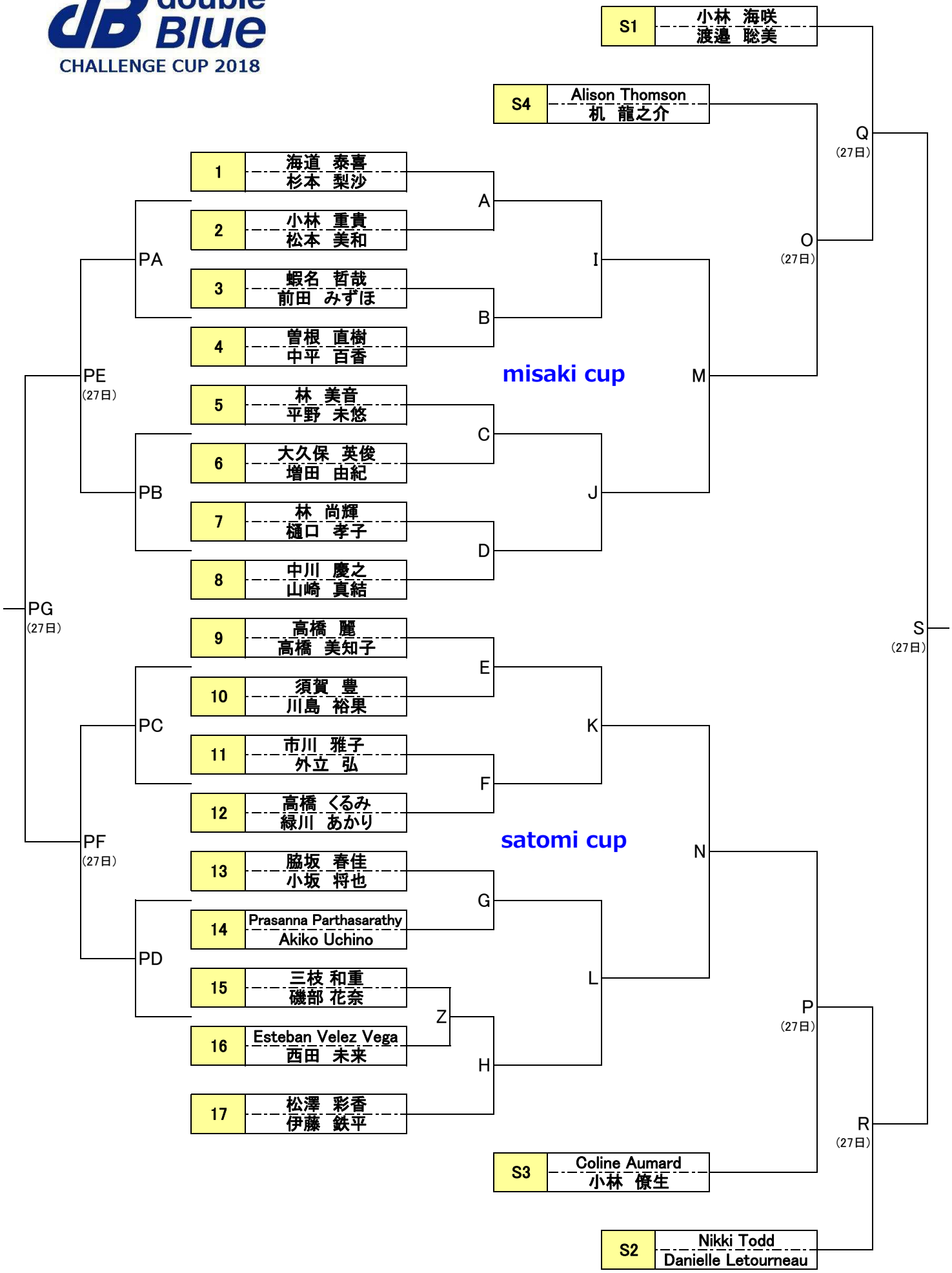

*misaki cup / satomi cup = tin:19inch
*ベスト6以上 = tin:17inch